Published: 11-May-2011

Bumpers -

Description	Nm	lb-ft
Front bumper bolts	25	18
Windshield washer reservior bolts	5	3.5
Front bumper cover bolts	5	3.5

mcx30.c

Published: 11-May-2011

Bumpers - Front Bumper

Removal and Installation

Removal

- NOTE: Removal steps in this procedure may contain installation details.

1. Disconnect the battery ground cable.

   Refer to: Specifications (414-00 Battery and Charging System - General Information, Specifications).

2. Refer to: Front Bumper Cover (501-19 Bumpers, Removal and Installation).

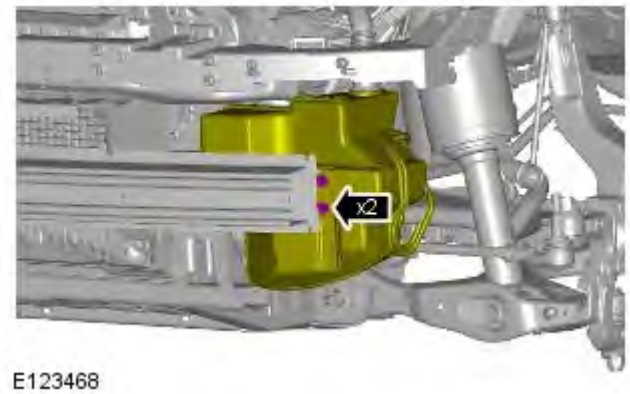

E123468

3. **3.** NOTE: Support as necessary.

   Torque: 10 Nm

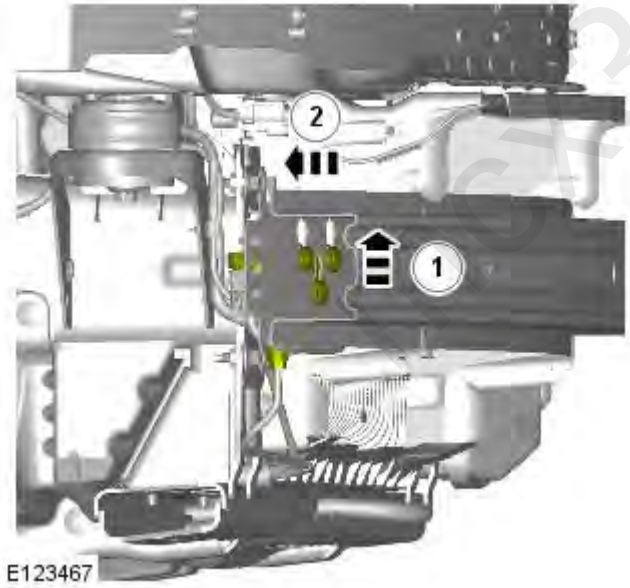

E123467

4. **4.** CAUTION: Take extra care not to damage the component.

   - NOTE: Support as necessary.

fx30.com

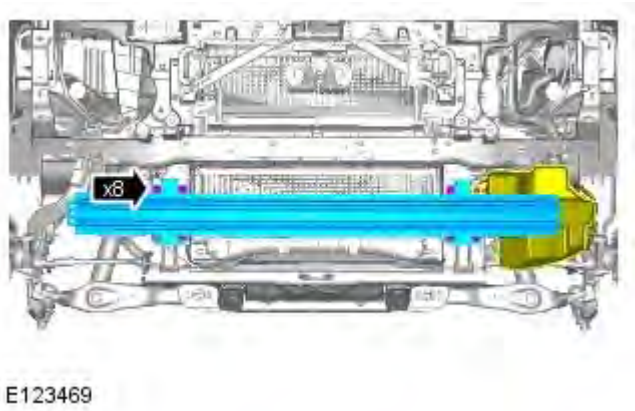

E123469

5. **5.** NOTE: With assistance remove the component.

   Torque: 25 Nm

Installation

1. To install, reverse the removal procedure.

mcx30.com

Published: 11-May-2011

Bumpers - Front Bumper Cover

Removal and Installation

Removal

- NOTE: Removal steps in this procedure may contain installation details.

1. Disconnect the battery ground cable.

   Refer to: Specifications (414-00 Battery and Charging System - General Information, Specifications).

2. Refer to: Front Fender Moulding (501-08 Exterior Trim and Ornamentation, Removal and Installation).

3. **3.** WARNING: Make sure to support the vehicle with axle stands.

   Raise and support the vehicle.

4. Remove both the front wheels and tires.

5.

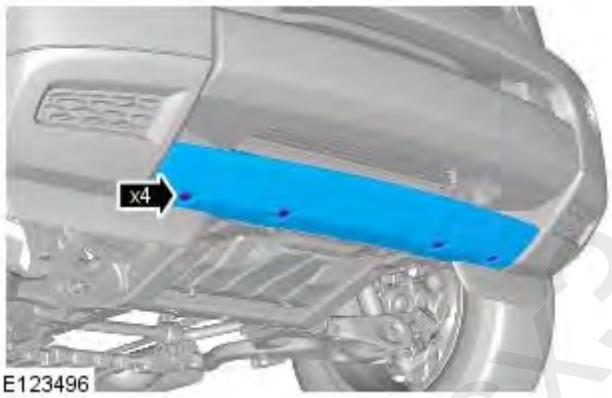

E123496

6. **6.** NOTE: The procedure must be carried out on both sides.

   Torque: 1 Nm

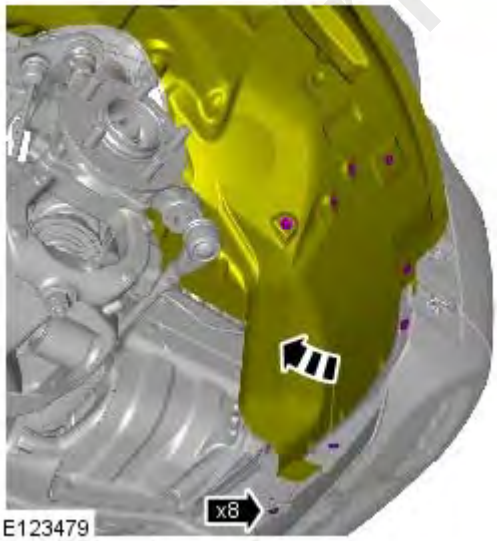

E123479

mcx30.com

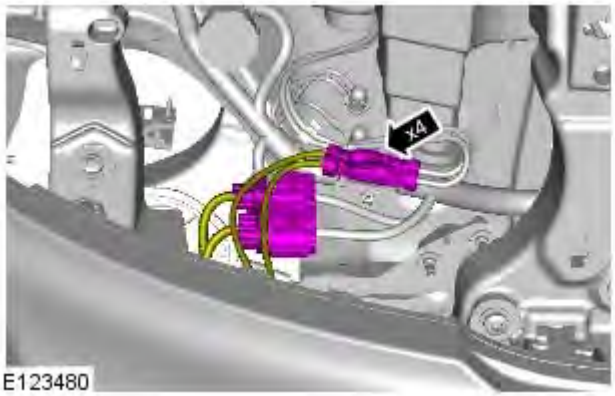

E123480

7. **7.** CAUTION: Take extra care not to damage the wiring harnesses.

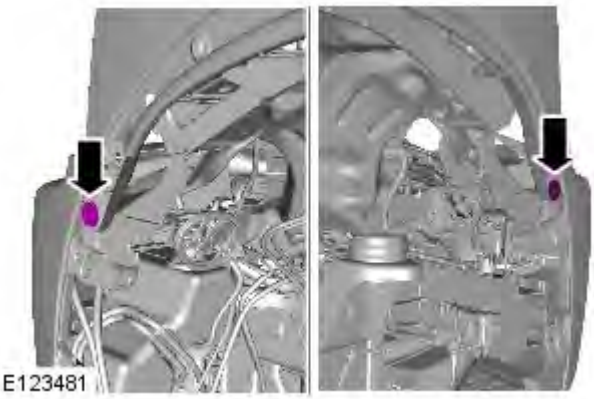
E123481

8. *Torque:* 5 Nm

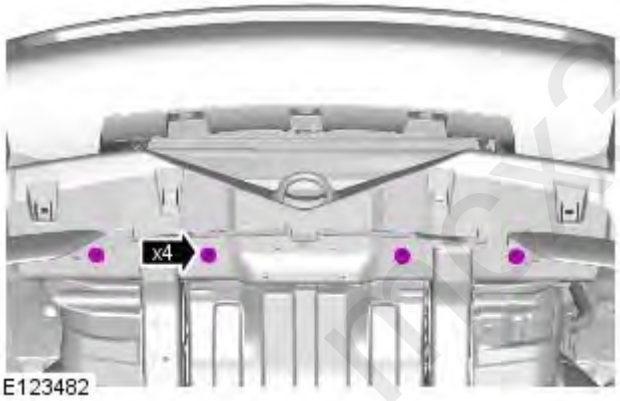

E123482

9. *Torque:* 5 Nm

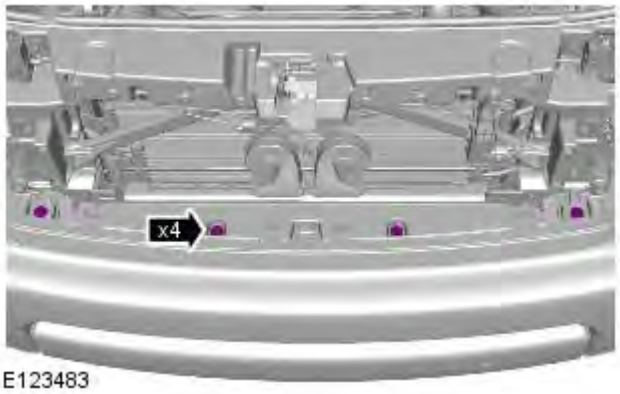

E123483

10. *Torque:* 5 Nm

mex30.com

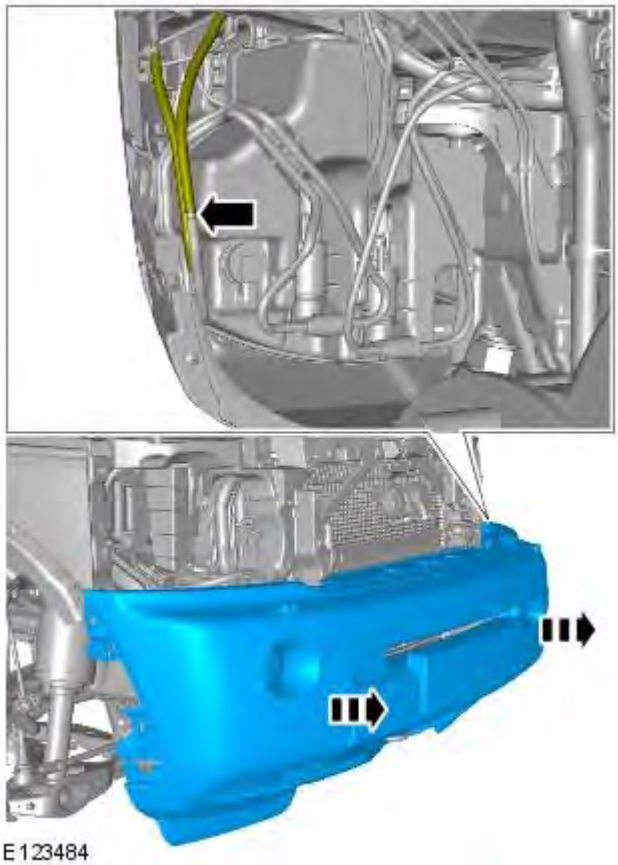

E123484

11. **11.** NOTE: With assistance remove the component.

E123485

12. **12.** NOTE: Do not disassemble further if the component is removed for access only.

Torque: 1 Nm

mcx30.com

13. *Torque:* 1.5 Nm

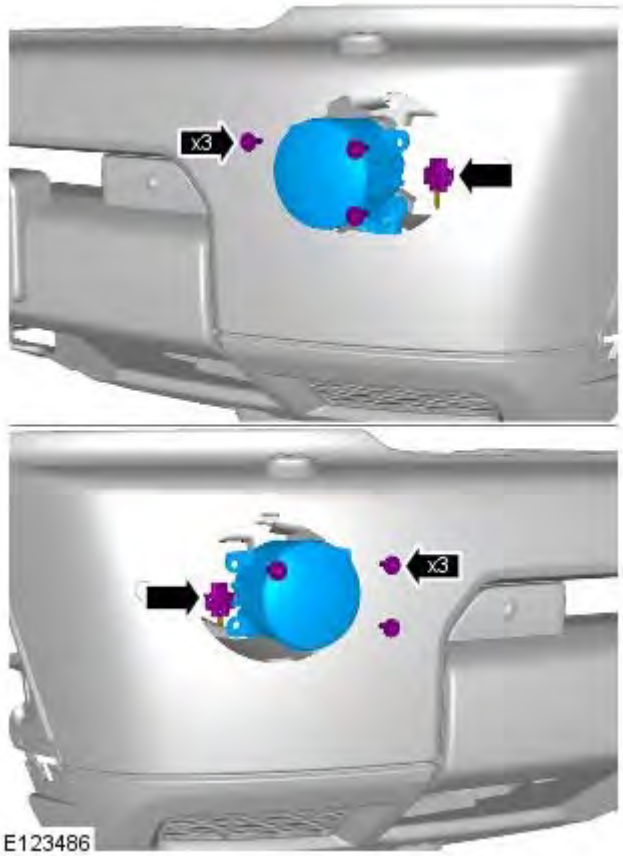

14.

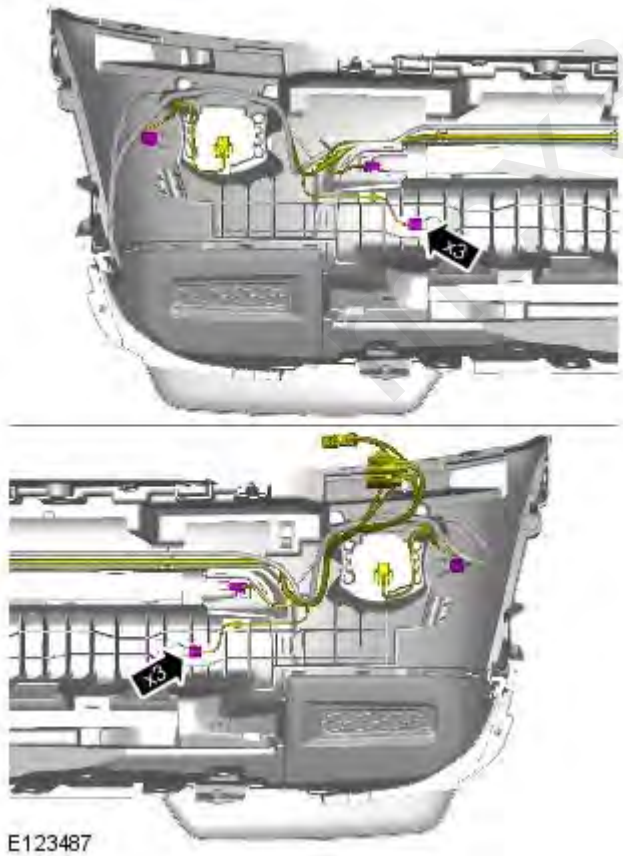

xc60.com

15. *Torque:* 1 Nm

E123488

16. **16.** CAUTION: Make sure the locating tangs are aligned. Failure to follow this instruction may result in damage to the vehicle.

E123489

17.

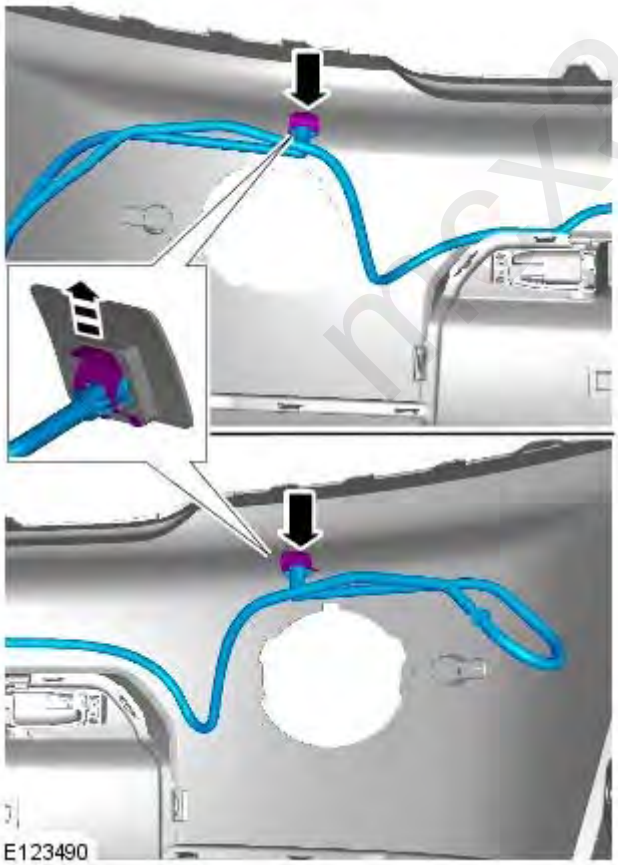

E123490

mcx30.com

18.

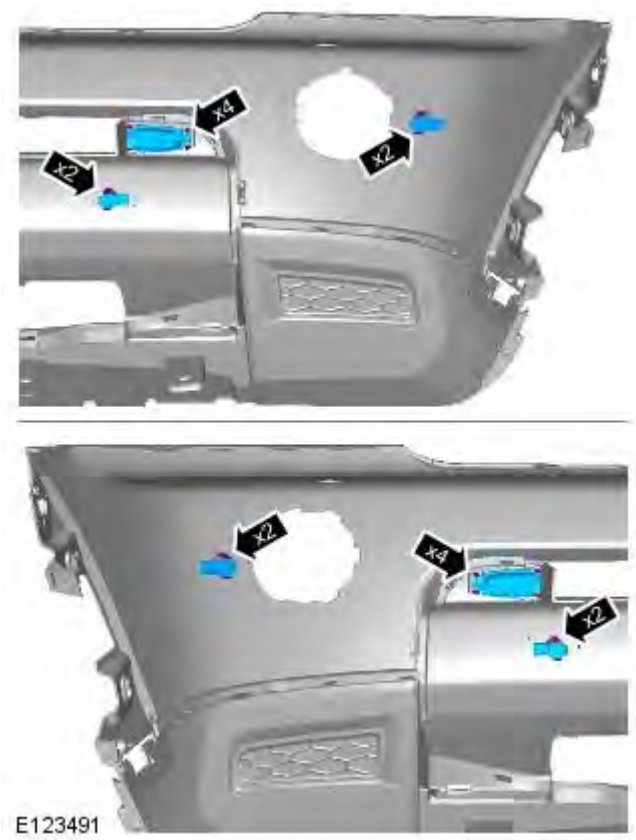

Installation

1. To install, reverse the removal procedure.

mcx30.com

Published: 11-May-2011

Bumpers - Front Bumper Lower Cover

Removal and Installation

Removal

- NOTE: Removal steps in this procedure may contain installation details.

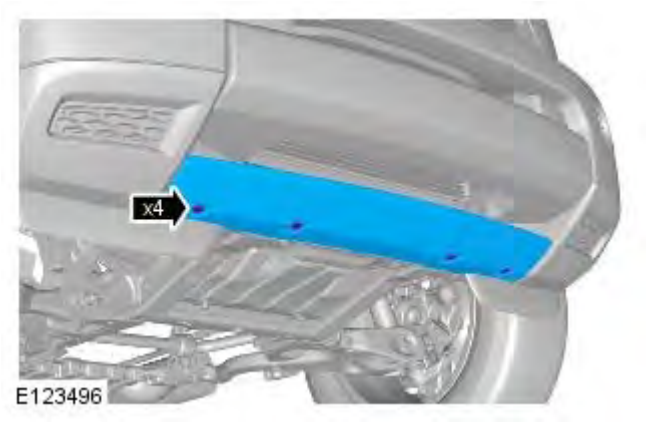

1.

Installation

1. To install, reverse the removal procedure.

mcx30.com

Bumpers - Rear Bumper Cover

Removal and Installation

Removal

All vehicles

1. WARNING: Do not work on or under a vehicle supported only by a jack. Always support the vehicle on safety stands.

   Raise and support the vehicle.

2. Remove both rear lamp assemblies.
   For additional information, refer to: Rear Lamp Assembly (417-01 Exterior Lighting, Removal and Installation).

3. Remove both rear quarter panel mouldings.
   For additional information, refer to: Rear Quarter Panel Moulding (501-08 Exterior Trim and Ornamentation, Removal and Installation).

4. Remove 4 scews, 2 clips and 2 bolts from the rear bumper cover.

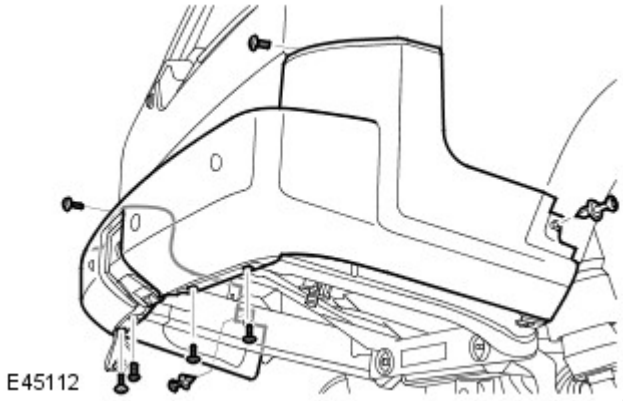

5. With assistance, remove 4 clips from the inner edge of the bumper cover.
   - Tilt the tailgate for access.
   - Open the tailgate hinge cover.

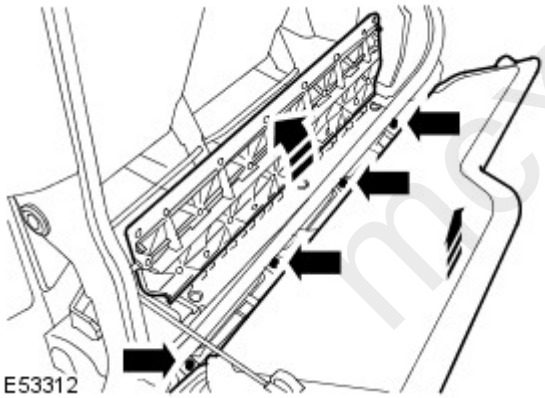

mcx30.com

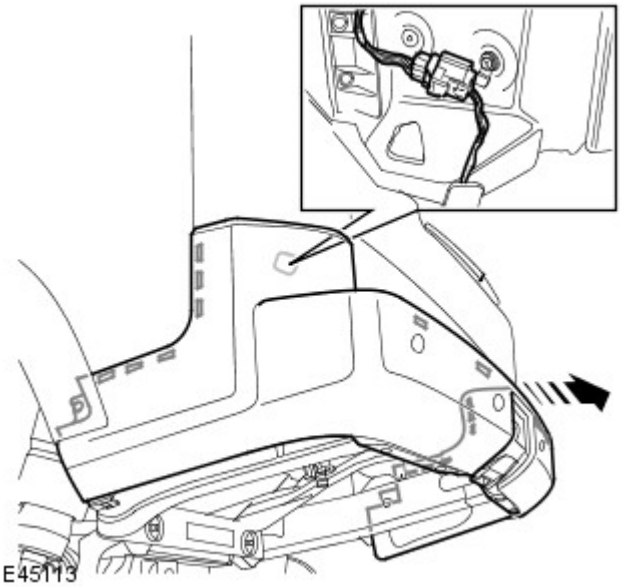

6. Remove the rear bumper cover.

- Release from the 12 clips.
- If installed, disconnect the parking aid sensor wiring harness electrical connector.

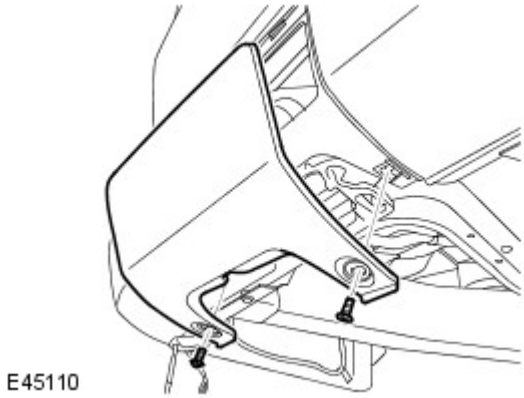

7. NOTE: Do not disassemble further if the component is removed for access only.

Remove the towing eye cover.

- Remove the 2 screws.

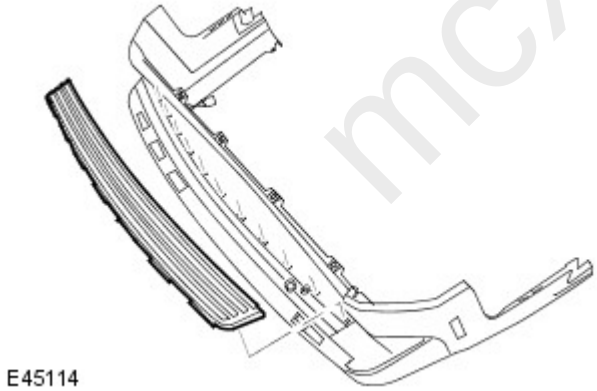

8. Remove the rear bumper trim panel.

- Release the 11 clips.

9. Remove the bumper insert.

- Remove the 3 screws.

Vehicles with parking aid

mcx30.com

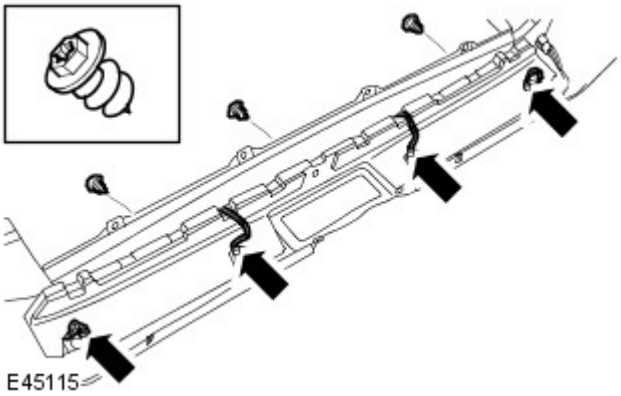

10. Remove the parking aid sensor wiring harness.

- Disconnect the 4 electrical connectors.

Vehicles with parking aid

11. Remove the parking aid sensor.

- Release the 2 clips.
- Repeat the above procedure for the remaining 3 sensors.

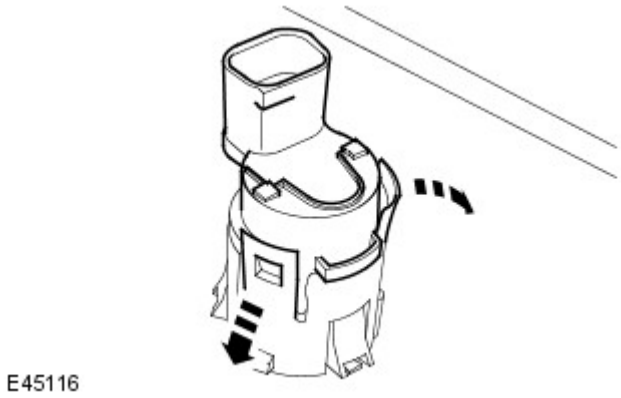

Vehicles with parking aid

12. Remove the parking aid sensor trim panel.

- Release the 3 clips.
- Repeat the above procedure for the remaining 3 sensor trim panels.

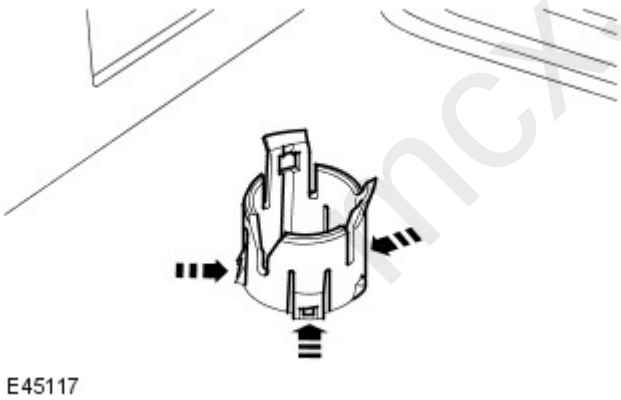

Installation

Vehicles with parking aid

1. Install the parking aid sensor trim panels.

Vehicles with parking aid

2. Install the parking aid sensors.

Vehicles with parking aid

3. Install the parking aid sensor wiring harness.

- Connect the electrical connectors.

4. Install the bumper insert.

- If installed, secure the parking aid sensor wiring harness.

mcx30.com

- Tighten the screws.

5. Install the rear bumper trim panel.
6. Install the towing eye cover.
   - Tighten the screws.
7. Install the rear bumper cover.
   - If installed, connect the parking aid sensor wiring harness electrical connector.
   - Secure with the clips.
   - Tighten the screws.
   - Tighten the bolts to 10 Nm (7 lb.ft).
8. Install both rear quarter panel mouldings.
   For additional information, refer to: Rear Quarter Panel Moulding (501-08 Exterior Trim and Ornamentation, Removal and Installation).
9. Install both of the rear lamp assemblies.
   For additional information, refer to: Rear Lamp Assembly (417-01 Exterior Lighting, Removal and Installation).

mcx30.com